Two - Bolt Holes Flange Unit

Normal Duty

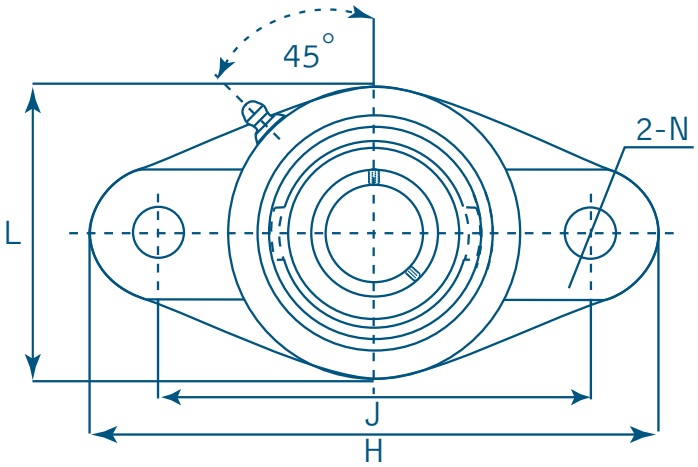

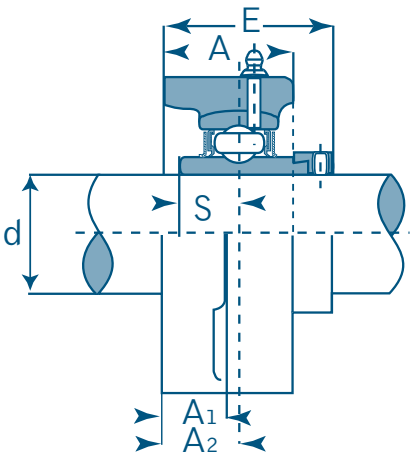

HCFLU

Eccentric Locking Collar

Unit No.	Shaft Dia. Inch / mm	Dimensions Inch / mm									Bolt	Bearing	Housing	Mass	
	d	H	J	A	A1	A2	N	L	E	S	Size	No.	No.	kg	lbs
HCFLU 201 201-8 202 202-10 203 203-11 204 204-12	12 mm 1/2 15 mm 5/8 17 mm 11/16 20 mm 3/4	4-7/16 112.5	3-17/32 90	1-5/32 29.5	19/32 15	3/4 19	7/16 11.5	2-13/32 61	1-25/32 45.5	0.6692 17	3/8 M 10	HC 201 201-8 202 202-10 203 203-11 204 204-12	FLU 204	0.50	1.10
HCFLU 205 205-14 205-15 205-16	25 mm 7/8 15/16 1	4-27/32 123	3-29/32 99	1-3/16 30	19/32 15	3/4 19	7/16 11.5	2-3/4 70	1-13/16 45.9	0.6850 17.4	3/8 M10	HC 205 205-14 205-15 205-16	FLU 205	0.69	1.52
HCFLU 206 206-18 206-19 206-20	30 mm 1-1/8 1-3/16 1-1/4	5-19/32 142	4-19/32 116.5	1-9/32 32.5	5/8 16	25/32 20	7/16 11.5	3-7/32 82	1-31/32 50.1	0.7165 18.2	3/8 M10	HC 206 206-18 206-19 206-20	FLU 206	0.98	2.16
HCFLU 207 207-20 207-21 207-22 207-23	35 mm 1-1/4 1-5/16 1-3/8 1-7/16	6-7/32 158	5-1/8 130	1-13/32 36	21/32 17	13/16 21	9/16 14	3-11/16 94	2-3/32 53.3	0.7401 18.8	7/16 M12	HC 207 207-20 207-21 207-22 207-23	FLU 207	1.41	3.10
HCFLU 208 208-24 208-25	40 mm 1-1/2 1-9/16	6-25/32 172	5-21/32 143.5	1-17/32 39	21/32 17	15/16 24	9/16 14	4-3/64 103	2-5/16 58.9	0.8425 21.4	7/16 M12	HC 208 208-24 208-25	FLU 208	1.77	3.89
HCFLU 209 209-26 209-27 209-28	45 mm 1-5/8 1-11/16 1-3/4	7-3/32 180	5-27/32 148.5	1-9/16 40	23/32 18	15/16 24	5/8 16	4-1/4 108	2-5/16 58.9	0.8425 21.4	1/2 M14	HC 209 209-26 209-27 209-28	FLU 209	2.00	4.40

Two - Bolt Holes Flange Unit

GRB

Normal Duty

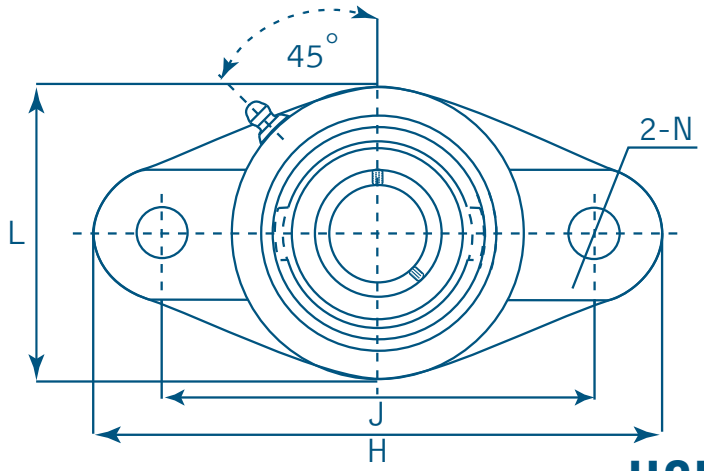

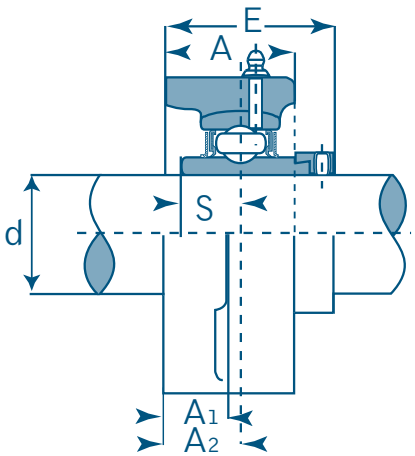

HCFLU

Eccentric Locking Collar

Unit No.	Shaft Dia. Inch / mm	Dimensions Inch / mm									Bolt	Bearing	Housing	Mass	
	d	H	J	A	A1	A2	N	L	E	S	Size	No.	No.	kg	lbs
HCFLU 210 210-30 210-31 210-32	50 mm 1-7/8 1-15/16 2	7-15/32 190	6-3/16 157	1-25/32 45	25/32 20	1-3/32 28	23/32 18	4-1/2 114	2-19/32 66.1	0.9685 24.6	5/8 M 16	HC 210 210-30 210-31 210-32	FLU 210	2.38	5.24
HCFLU 211 211-32 211-34 211-35	55 mm 2 2-1/8 2-3/16	8-17/32 217	7-1/4 184	1-7/8 48	13/16 21	1-7/32 31	23/32 18	5-3/32 128	2-15/16 74.6	1.0905 27.7	5/8 M16	HC 211 211-32 211-34 211-35	FLU 211	3.52	7.74
HCFLU 212 212-36 212-38 212-39	60 mm 2-1/4 2-3/8 2-7/16	9-11/32 237	7-15/16 202	2-3/32 53	13/16 21	1-11/32 34	23/32 18	5-7/16 138	3-3/16 80.8	1.2165 30.9	5/8 M 16	HC 212 212-36 212-38 212-39	FLU 212	4.8	10.56
HCFLU 213 213-40	65 mm 2-1/2	10-3/32 256	8-9/32 210	2-7/32 56	7/8 22	1-1/2 38	13/16 21	5-31/32 152	3-17/32 89.6	1.3425 34.1	11/16 M 18	HC 213 213-40	FLU 213	6.0	13.2
HCFLU 214 214-43 214-44	70 mm 2-11/16 2-3/4	10-13/32 264	8-1/2 216	2-9/32 58	29/32 23	1-1/2 38	13/16 21	6-3/16 157	3-17/32 89.6	1.3425 34.1	11/16 M 18	HC 214 214-43 214-44	FLU 213	6.3	13.86
HCFLU 215 215-47 215-48	75 mm 2-15/16 3	10-13/16 275	8-27/32 225	2-7/16 62	1-5/8 41	1-5/8 41	13/16 21	6-15/32 164	3-25/32 95.8	1.4690 37.3	11/16 M 18	HC 215 215-47 215-48	FLU 215	7.2	15.84